RE-HANDLING CLAMSHELL BUCKETS C-SERIES

C-Series with *HPXdrive* up to 40t

FUNCTION:
ONE UNIT

The Kinshofer rotation and the HPXdrive are forming one compact unit. There are no short hydraulic hoses necessary thanks to the direct connection. There are no leaks due to broken hoses possible and you can thus use the grab in water protection zones.

SHELL EXCHANGE SYSTEM:
SHAFT

By loosening the shell bolts, the shells can be exchanged. The drive unit itself remains untouched.
You can thus change e.g. to another width or shell version.

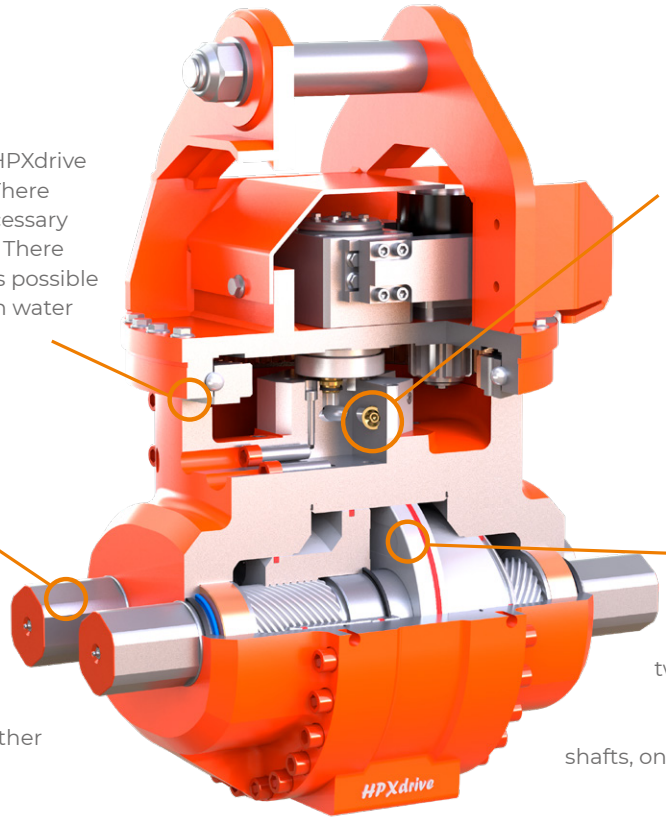

SAFETY:
VALVES

An integrated non-return valve guarantees the secure retention of loads.
The grab is maintenance-low as the drive unit itself has no grease points, saving time and consumables.

DESIGN:
SHAFT & PISTON

Absolute shell synchronisation without compensation rods.
The torque is generated by two pistons, which run opposed and have four helix threads.
The force is delivered to two shafts, on which the shells are mounted.

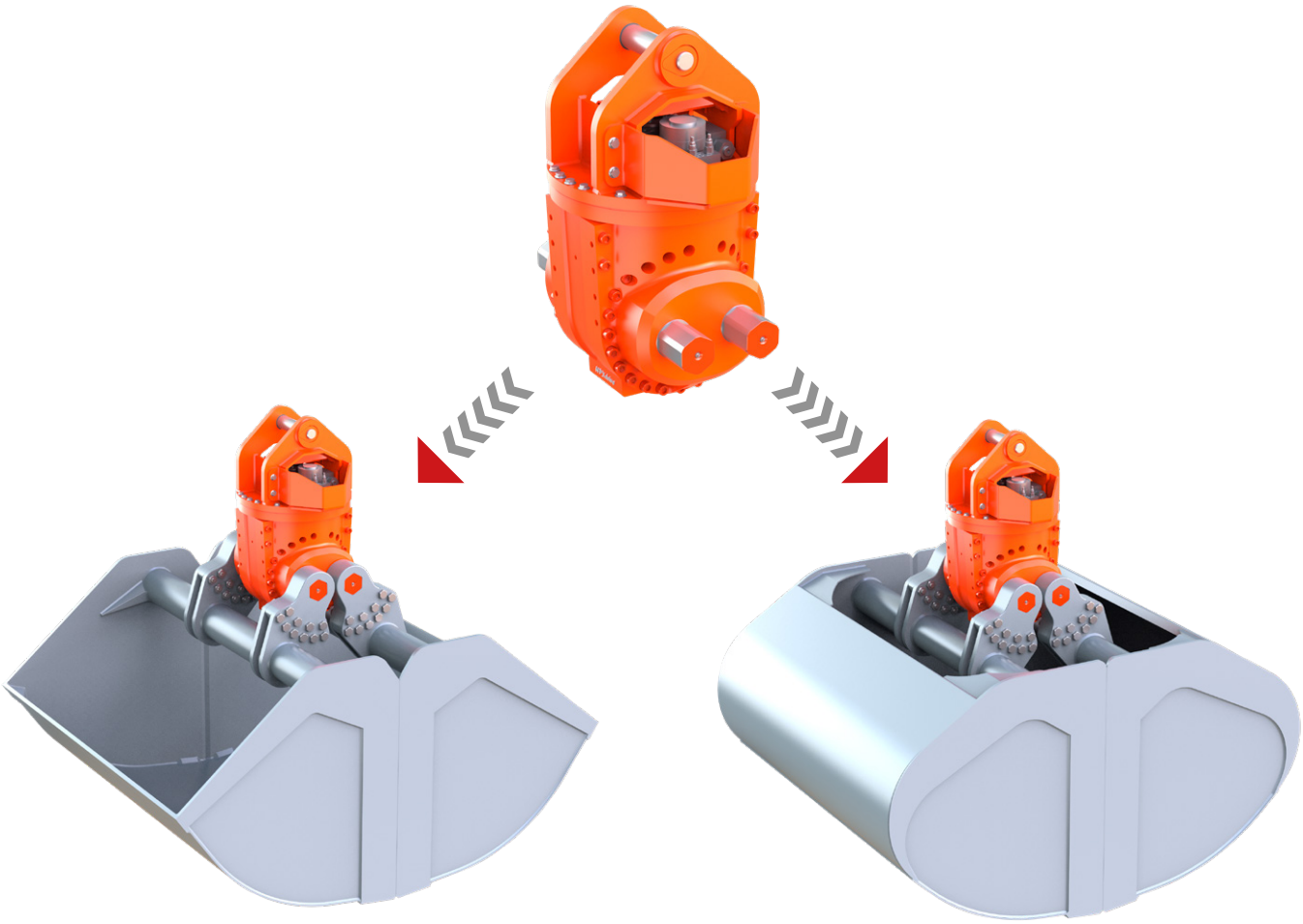

C40HPX WITH OPEN SHELLS:
RE-HANDLING CLAMSHELL BUCKET with HPXdrive

C40HPX-C WITH CLOSED SHELLS:
RE-HANDLING CLAMSHELL BUCKET with HPXdrive

We reserve the right to amend specifications without prior notice. KINSHOFER GmbH, 83607 Holzkirchen, Germany

Comparison of Closing Forces in kN

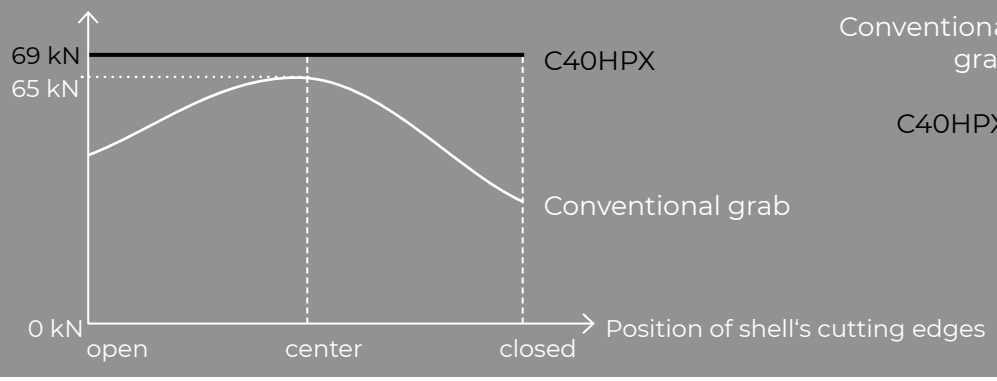

Compact Design

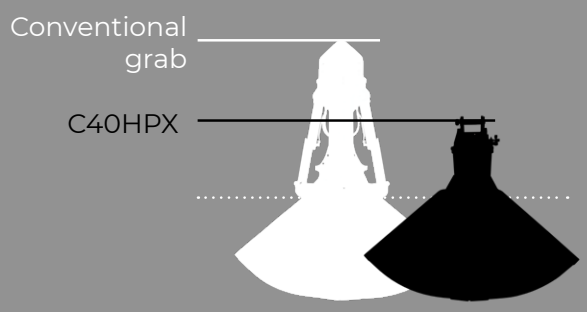

Also suitable for underwater works

C40HPX Re-handling Clamshell Bucket with *HPXdrive*

Robust, cylinderless re-handling clamshell bucket with *HPXdrive*, especially for loading bulk materials for excavators from 18t to 25t, as well as re-handling excavator from 20t to 40t.

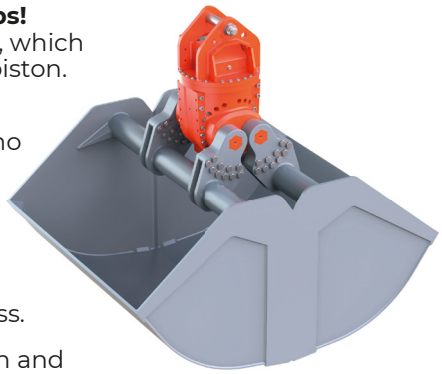

- ▹ ***HPXdrive* – the revolutionary concept for hydraulically operated grabs!** The rotation of the arms of the grab is generated by two hollow shafts, which run opposed and have a helix thread, hydraulically driven by a single piston. **No hydraulic cylinder required.**
- ▹ **50% longer life cycle.** dThe drive unit runs in a permanent oil bath – no lubrication necessary. Resistant against dirt and blows due to the compact design.
- ▹ **Optimal loading** due to high volume of the torsion-resistant shells and precise positioning thanks to **integrated rotation**.
- ▹ **Constant closing forces** during the entire opening and closing process.
- ▹ With **integrated rotation**: Swivel and bevel sealed. Rotary feedthrough and motor accessible directly.
- ▹ **Integrated non-return valve** guarantees security of the load.

Re-handling Clamshell Buckets with open shells C40HPX

Type	Opening (mm)	Width E (mm)	Height C min. (mm)	Height C max. (mm)	Volume (liter)	Weight (kg)	Capacity (kg)	Closing force at cutting edge (kN)
C40HPX-082-28	2820	825	950	2020	1250	1825	9000	59
C40HPX-160-26	2620	1600	950	1920	2000	2016	9000	64
C40HPX-180-24	2420	1800	950	1820	1900	1910	9000	69
C40HPX-180-25	2520	1800	980	1910	2100	1990	9000	66
C40HPX-180-26	2620	1800	950	1920	2300	2050	9000	64
C40HPX-180-28	2820	1800	950	2020	2700	2100	9000	59
C40HPX-200-24	2420	2000	950	1820	2000	2135	9000	69
C40HPX-200-26	2620	2000	950	1920	2500	2140	9000	64
C40HPX-200-28	2820	2000	950	2020	3000	2155	9000	59
C40HPX-200-30	3020	2000	950	2120	4000	2170	9000	55
C40HPX-250-30	3020	2500	950	2120	5000	2480	9000	55

Re-handling Clamshell Buckets with closed shells C40HPX-C (other opening widths on request)

Type	Opening (mm)	Width E (mm)	Height C min. (mm)	Height C max. (mm)	Volume (liter)	Weight (kg)	Capacity (kg)	Closing force at cutting edge (kN)
C40HPX-150-26-C	2600	1500	990	1950	2250	2400	9000	55
C40HPX-150-30-C	3000	1500	1020	2160	3000	2400	9000	63
C40HPX-200-26-C	2600	2000	990	1950	3000	2360	9000	55
C40HPX-200-30-C	3000	2000	1020	2160	4000	2440	9000	63
C40HPX-250-26-C	2600	2500	990	1950	3750	2320	9000	55
C40HPX-250-30-C	3000	2500	1020	2160	5000	2480	9000	63

All package consists of: re-handling clamshell bucket, **KINSHOFER** rotation (pin-Ø 70 mm / lug distance 227 mm), HPXdrive and non-return valve

Accessories

Typ	Description
KM 501 RD50	upper suspension without pendulum damper
KSW21/25 cardanic	adapter for system L-Lock KMS21/25L / KHS21/25L incl. cardan link excl. pendulum damper – up to 40t
	adapters for quick change systems from other manufacturers or different sizes on request

Requirements of carrier machine

Operating pressure (open/close):	**max. 35 MPa (350 bar)**
Pump capacity (open/close):	120 - max. 300 l/min
Operating pressure (rotate):	**max. 14 - 25 MPa (140 - 250 bar)**
Pump capacity (rotate):	max. 26 - 60 l/min
Cycle times (open/close)	1,5 / 2,8 Sek. bei 200 l/min

Technical drawings

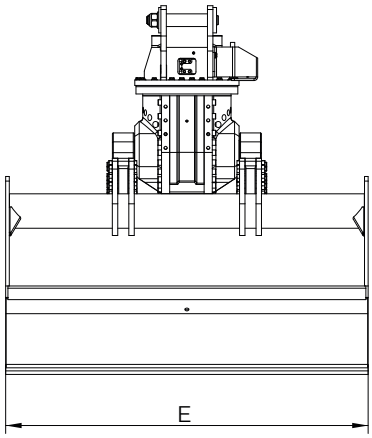

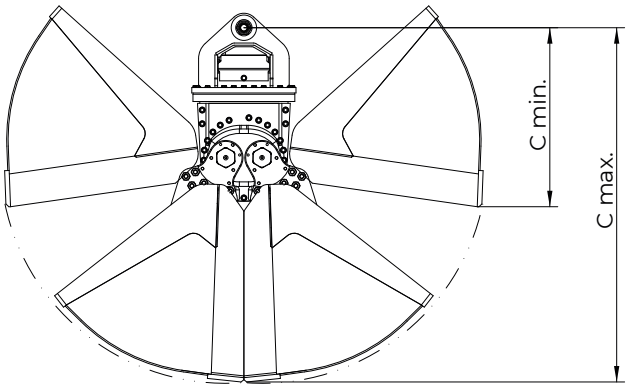

We reserve the right to amend specifications without prior notice. **KINSHOFER** GmbH, 83607 Holzkirchen, Germany

Re-handling Clamshell Bucket 18 - 30t

C30V

Durable Re-handling Clamshell Bucket, especially for loading bulk materials for excavators from 18t to 25t, as well as re-handling excavator from 20t to 30t.

- **Optimal loading** due to high volume of the torsion-resistant shells and **precise positioning** thanks to flat, robust 15t-rotator.
- **Long life** is ensured thanks to wear-resistant shells and hardened pins and bushings. All **breaing points are sealed**.
- **Integrated non-return valve** guarantees security of the load.
- **Excellent digging characteristics** are the result of high closing forces due to two vertical cylinders.

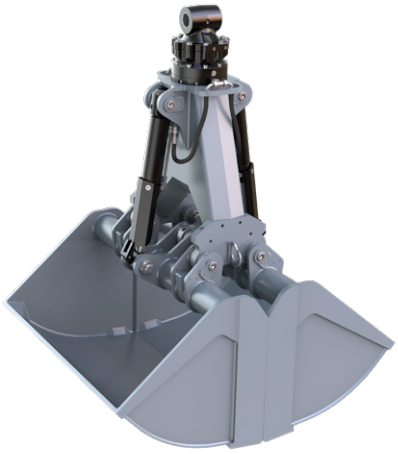

Re-handling Clamshell Bucket C30V

Type	Opening A (mm)	Width E (mm)	Length F (mm)	Height C min. (mm)	Height C max. (mm)	Volume (liter)	Weight (kg)	Load capacity (kg)
C30V-100-21	2100	1000	1740	1460	2130	830	1050	6000
C30V-120-21	2100	1200	1740	1460	2130	1000	1150	6000
C30V-150-21	2100	1500	1740	1460	2130	1250	1220	6000
C30V-180-21	2100	1800	1740	1460	2130	1500	1290	6000
C30V-180-23	2300	1800	1885	1465	2230	1800	1300	6000
C30V-200-23	2300	2000	1885	1465	2230	2000	1350	6000

Package consists of: re-handling clamshell bucket, **KINSHOFER** rotator and non-return valve

KINSHOFER Rotator

Continuous rotation and two oil passages. Overload protection is ensured by pressure relief valves.

Type	Upper connection (width/Ø-pin) (mm)	Torque (Nm)	Bending moment max. (Nm)
KM 15 F273/273	180 / Ø 70	2000	50000

Accessories

Type	Description
KM 501 19t-60t	upper suspension without pendulum damper
KM 511 19t-60t	upper suspension with pendulum damper
KM 510 19t-60t	single pendulum damper
KM 680 C30V	scraper for C30V - specify width and opening when ordering alone

Requirements of carrier machine

Operating pressure (open/close):	**max. 35 MPa (350 bar)**
Pump capacity (open/close):	120 - max. 200 l/min
Operating pressure (rotate):	**max. 35 MPa (350 bar)**
Pump capacity (rotate):	20 - 50 l/min

Technical drawing

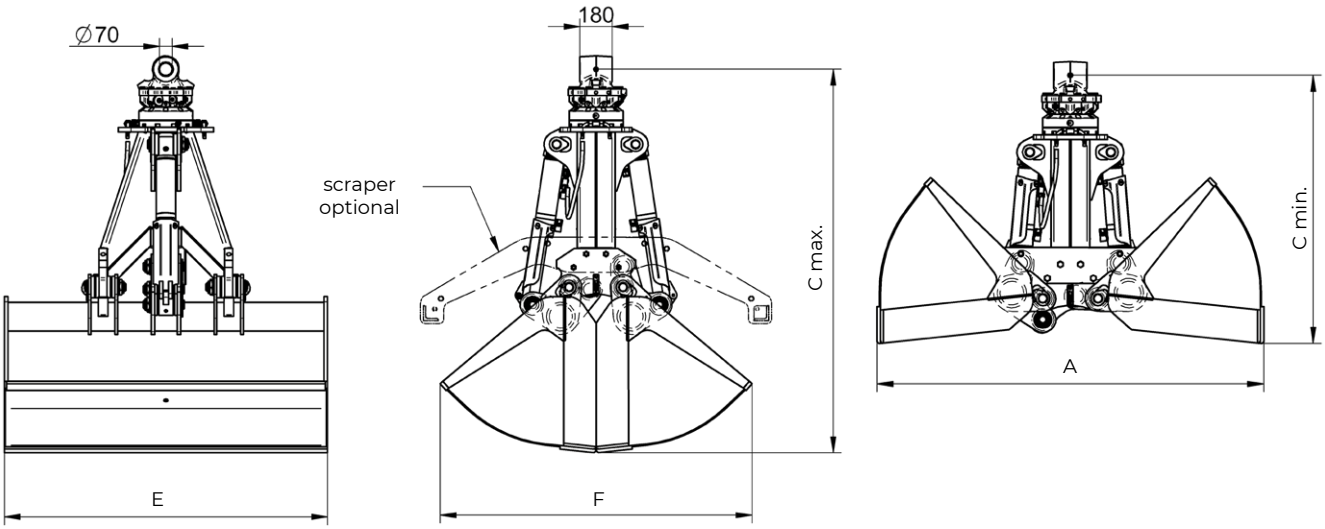

C40VHD Re-handling Clamshell Bucket 18 - 40t

Durable Re-handling Clamshell Bucket, especially for loading bulk materials for excavators from 18t to 25t, as well as re-handling excavator from 20t to 40t.

- **Optimal loading** due to high volume of the torsion-resistant shells and precise positioning thanks to **integrated rotation**.
- **Long life** is ensured due to the use of 500 HB steel in the manufacture of cutting edges. Shell back walls (8 mm, HB 400) also resist highly abrasive materials. Bearing points with **specially coated bushings and hardened pins**.
- **Wear resistant shells**. C40VHD-C: due to closed shells ideal for very fine-grained loads (e.g. fertilizer).
- With **integrated rotation**: Swivel and bevel sealed. Rotary feedthrough and motor accessible directly.
- **Integrated non-return valve** guarantees security of the load.
- **Excellent digging characteristics** are the result of high closing forces due to two vertical cylinders.

C40VHD-24

Re-handling Clamshell Buckets with open shells C40VHD

Type	Opening (mm)	Width E (mm)	Height C (mm)	Volume (liter)	Weight (kg)	Load capacity (kg)
C40VHD-125-24	2400	1250	2530	1250	1670	7000
C40VHD-150-24	2400	1500	2530	1500	1700	7000
C40VHD-175-24	2400	1750	2530	1750	1770	7000
C40VHD-200-24	2400	2000	2530	2000	1920	7000
C40VHD-125-26	2600	1250	2640	1560	1680	7000
C40VHD-150-26	2600	1500	2640	1875	1760	7000
C40VHD-175-26	2600	1750	2640	2190	1830	7000
C40VHD-180-26	2600	1800	2640	2300	1850	7000
C40VHD-200-26	2600	2000	2640	2500	1990	7000
C40VHD-150-28	2800	1500	2740	2250	1870	7000
C40VHD-175-28	2800	1750	2740	2600	1960	7000
C40VHD-200-28	2800	2000	2740	3000	2050	7000
C40VHD-230-28	2800	2300	2740	3500	2150	7000
C40VHD-150-30	3000	1500	2820	2600	1920	7000
C40VHD-175-30	3000	1750	2820	3000	2010	7000
C40VHD-200-30	3000	2000	2820	3500	2100	7000
C40VHD-230-30	3000	2300	2820	4000	2250	7000

Re-handling Clamshell Buckets with closed shells C40VHD-C (other opening widths on request)

Type	Opening (mm)	Width E (mm)	Height C (mm)	Volume (liter)	Weight (kg)	Load capacity (kg)
C40VHD-125-26-C	2600	1250	2640	1875	1870	7000
C40VHD-150-26-C	2600	1500	2640	2250	1970	7000
C40VHD-175-26-C	2600	1750	2640	2625	2070	7000
C40VHD-200-26-C	2600	2000	2640	3000	2180	7000

All package consists of: re-handling clamshell bucket, **KINSHOFER** rotation (pin-Ø 70 mm / lug distance 227 mm) and non-return valve

Accessories

Type	Description
KM 501 RD50	upper suspension without pendulum damper
KM 680 C40VHD	scraper, weight approx. 250 kg - specify width and opening when ordering alone

Requirements of carrier machine

Operating pressure (open/close):	**max. 35 MPa (350 bar)**
Pump capacity (open/close):	120 - max. 200 l/min
Operating pressure (rotate):	**max. 14 MPa (140 bar)**
Pump capacity (rotate):	20 - 30 l/min

Technical drawings

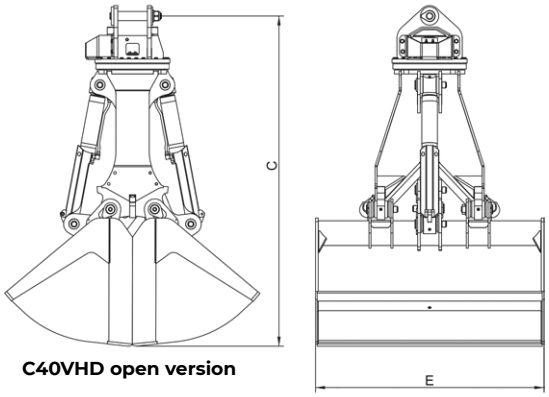

C40VHD open version

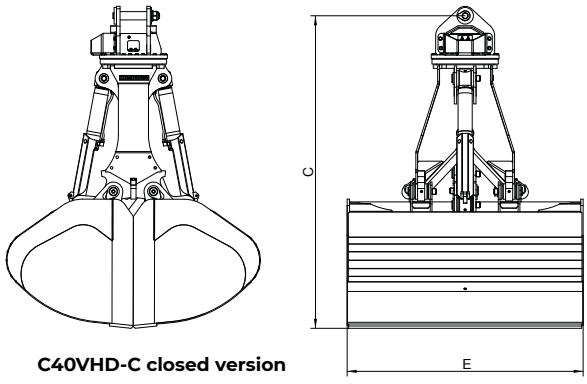

C40VHD-C closed version

We reserve the right to amend specifications without prior notice. **KINSHOFER** GmbH, 83607 Holzkirchen, Germany

Re-handling Clamshell Bucket up to 65t

C60VHD

Durable Re-handling Clamshell Bucket, especially for loading bulk materials for excavators from 30t to 45t, as well as re-handling excavator from 40t to 65t.

C60VHD-32

- ▷ **Optimal loading** due to high volume of the torsion-resistant shells and precise positioning thanks to **integrated rotation**.
- ▷ **Long life** is ensured due to the use of 500 HB steel in the manufacture of cutting edges. Shell back walls (8 mm, HB 400) also resist highly abrasive materials.
- ▷ Bearing points with **specially coated bushings and hardened pins**.
- ▷ With **integrated rotation**: Swivel and bevel sealed. Rotary feedthrough and motor accessible directly.
- ▷ **Integrated non-return valve** guarantees security of the load.
- ▷ **Excellent digging characteristics** are the result of high closing forces due to two vertical cylinders.

Re-handling Clamshell Buckets with open shells C60VHD (gclosed version C on request)

Type	Opening (mm)	Width E (mm)	Height C (mm)	Volume (liter)	Weight (kg)	Load capacity (kg)
C60VHD-180-24	2400	1800	2500	1800	2380	9000
C60VHD-200-24	2400	2000	2500	2000	2450	9000
C60VHD-220-24	2400	2200	2500	2200	2530	9000
C60VHD-180-26	2600	1800	2740	2300	2420	9000
C60VHD-200-26	2600	2000	2740	2500	2500	9000
C60VHD-220-26	2600	2200	2740	2750	2580	9000
C60VHD-180-28	2800	1800	2880	2700	2480	9000
C60VHD-200-28	2800	2000	2880	3000	2560	9000
C60VHD-220-28	2800	2200	2880	3300	2640	9000
C60VHD-180-32	3200	1800	2990	3600	2560	9000
C60VHD-200-32	3200	2000	2990	4000	2640	9000
C60VHD-220-32	3200	2200	2990	4400	2720	9000
C60VHD-250-32	3200	2500	2990	5000	2920	9000

Package consists of: re-handling clamshell bucket, **KINSHOFER** rotation (pin-Ø 70 mm / lug distance 227 mm) and non-return valve

Accessories

Type	Description
KM 501 RD50	upper suspension without pendulum damper
KM 680 C60VHD	scraper, weight approx. 360 kg - specify width and opening when ordering alone

Requirements of carrier machine

Operating pressure (open/close):	**max. 35 MPa (350 bar)**
Pump capacity (open/close):	120 - max. 200 l/min
Operating pressure (rotate):	**max. 14 MPa (140 bar)**
Pump capacity (rotate):	20 - 30 l/min

Technical drawings

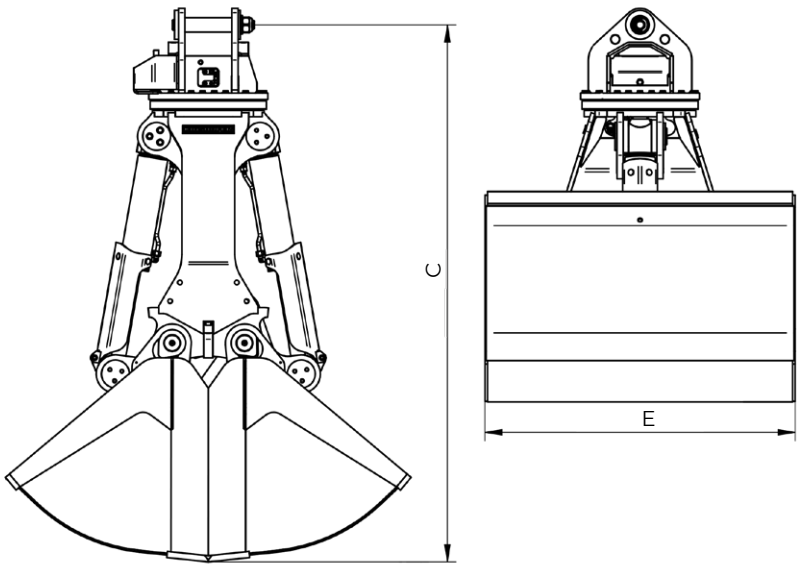

C100VHD Re-handling Clamshell Bucket up to 100t

Durable Re-handling Clamshell Bucket, especially for loading bulk materials for excavators from 60t to 80t, as well as re-handling excavator from 80t to 100t.

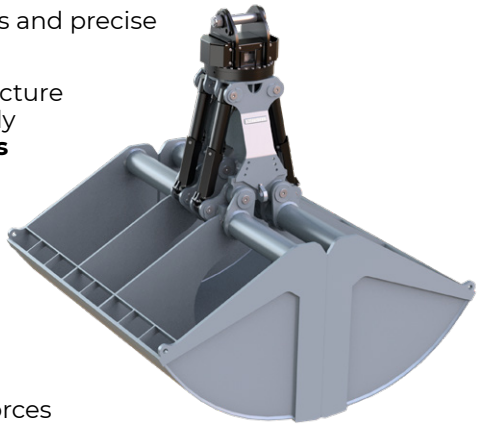

- **Optimal loading** due to high volume of the torsion-resistant shells and precise positioning thanks to **integrated rotation**.
- **Long life** is ensured due to the use of 500 HB steel in the manufacture of cutting edges. Shell back walls (8 mm, HB 400) also resist highly abrasive materials. Bearing points with **specially coated bushings and hardened pins**.
- **Shells equipped with four loading eyes** – one at each edge and **stopping grids at each side**.
- With **integrated rotation**: Swivel and bevel sealed. Rotary feedthrough and motor accessible directly.
- **Integrated non-return valve** guarantees security of the load.
- **Excellent digging characteristics** are the result of high closing forces due to four vertical cylinders.

Re-handling Clamshell Buckets C100VHD

Type	Opening A (mm)	Width E (mm)	Height C (mm)	Volume (liter)	Weight (kg)	Load capacity (kg)
C100VHD-220-39	3900	2200	3475	7000	5200	12000

Note: other widths and volumes on request

Package consists of: re-handling clamshell bucket, KINSHOFER rotation (pin-Ø 80 mm / lug distance 200 mm) and non-return valve

Accessories

Type	Description
KM 501 RD120	upper suspension without pendulum damper

Requirements of carrier machine

Operating pressure (open/close):	**max. 35 MPa (350 bar)**
Pump capacity (open/close):	200 - max. 400 l/min
Operating pressure (rotate):	**max. 14 MPa (140 bar)**
Pump capacity (rotate):	20 - 40 l/min

Technical drawings

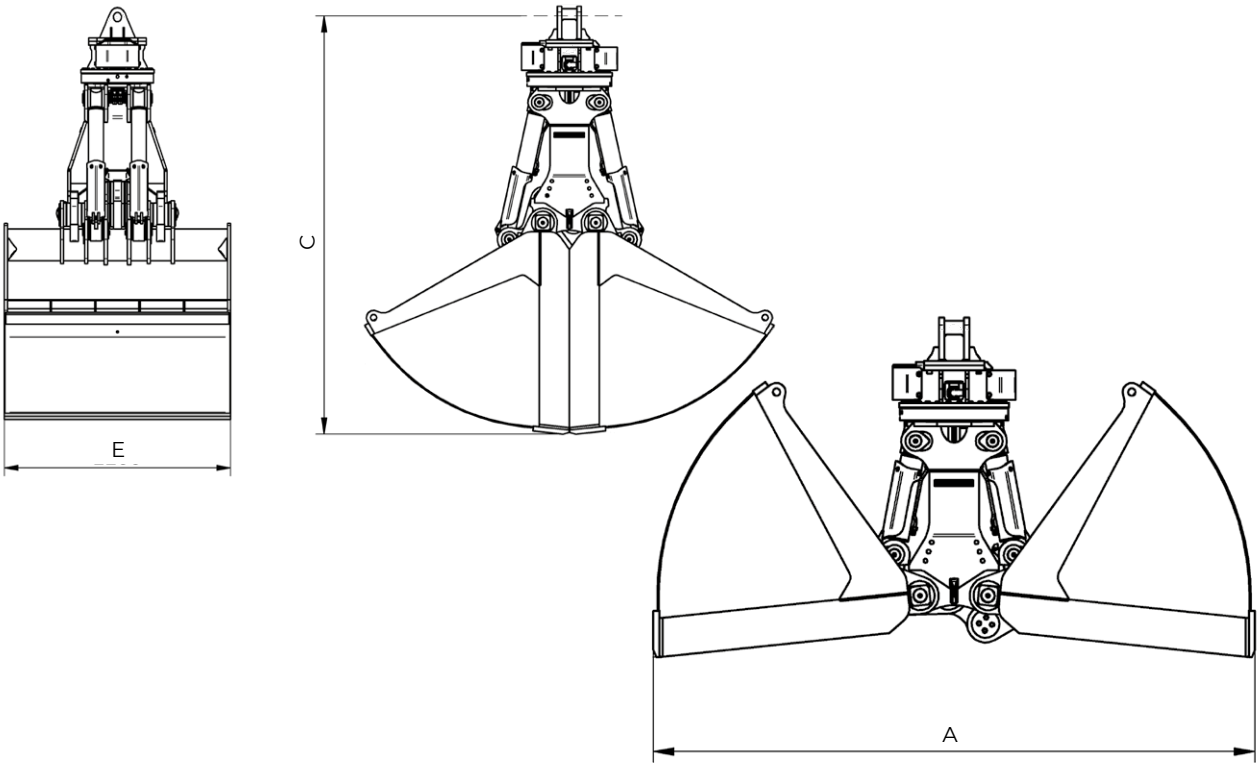

We reserve the right to amend specifications without prior notice. KINSHOFER GmbH, 83607 Holzkirchen, Germany

Mounting Options for Attachments

KM 501 – upper suspension without pendulum damper – specify excavator type when ordering

Type	Attachments	Upper connection rotator (width x pin-Ø) (mm)
KM 501 19t-60t	C30V	180 x 70
KM 501 RD50	C40HPX / C40VHD / C60VHD	225 x 70
KM 501 RD120	C100VHD	325 x 100

OQ cardanic - upper suspension with pendulum damper incl. adapter „Oilquick“ and hoses

Type	Operating weight
OQ70 cardanic	15t - 28t
OQ70/55 cardanic	18t - 32t
OQ80 cardanic	45t - 70t

SW cardanic - upper suspension with pendulum damper incl. adapter „Liebherr“

Type	Operating weight
SW48 cardanic	14t - 30t
SW48 Likufix cardanic*	14t - 30t
SW66 cardanic	28t - 45t
SW66 Likufix cardanic*	28t - 45t
SW77 cardanic	45t - 60t
SW77 Likufix cardanic*	45t - 60t

*incl. hoses

CW cardanic - upper suspension with pendulum damper incl. adapter „Verachtert“

Type	Operating weight
CW30 cardanic**	25t - 40t
CW45 cardanic**	25t - 40t
CW55 cardanic**	35t - 65t
CW70 cardanic	65t - 90t

**also available as smaller S-version

Note: adapters for quick change systems for other manufacturers or other sizes on request

Notes

Notes

CONTACT

KINSHOFER Branches

Hauptsitz Deutschland:
KINSHOFER GmbH
Raiffeisenstrasse 12
83607 Holzkirchen
Tel.: +49 (0) 8021 88 99 0
Email: info@kinshofer.com
www.kinshofer.com

United Kingdom:
KINSHOFER UK Ltd.
4 Milton Industrial Court
Horsfield Way, Bredbury
Stockport, Cheshire, SK6 2TA
Tel.: +44 (0) 161 406 7046
Fax: +44 (0) 161 406 7014
Email: sales-uk@kinshofer.com
www.kinshofer.com

France:
KINSHOFER France S.A.R.L.
8 Bis, rue Gabriel Voisin, CS 40003
F-51688 Reims Cedex 2
Tel.: +33 (0) 3 88 39 55 00
Fax: +33 (0) 3 88 79 06 75
Email: sales-france@kinshofer.com
www.kinshofer.com

Canada:
KINSHOFER North America
5040 Mainway Drive, Unit #11
Burlington, ON L7L 7G5
Tel.: +1 (905) 335-2856
Fax: +1 (905) 335-4529
Toll Free (North America): 1-800-268-9525
Email: sales-northamerica@kinshofer.com
www.kinshofer.com

United States of America:
KINSHOFER USA
6420 Inducon Drive
Suite G
Sanborn, NY, 14132
Tel.: +1 (716) 731-4333
Toll Free (North America): 1-800-268-9525
Email: sales-usa@kinshofer.com
www.kinshofer.com

Part of the
KINSHOFER
Group

kinshofer.com

DVS ZERT

KINSHOFER is an
ISO 9001 certified Company.
DVS ZERT is a registred trademark
of DVS ZERT® e.V., Düsseldorf.

KINSHOFER Subsidiaries

Nederland:
DEMAREC Demolition and Recycling Equipment B.V.
De Hork 32
NL-5431 NS Cuijk
Tel.: +31 (0) 485 442300
Fax: +31 (0) 485 442120
info@demarec.com
www.demarec.com

Sverige:
RF System AB
Furutorpsgatan 6
SE-288 34 Vinslöv
Tel.: +46 (0) 44 817 07
Fax: +46 (0) 44 859 63
Email: info@rf-system.se
www.rf-system.se

United Kingdom:
Auger Torque Europe Limited
Hazleton
Cheltenham, GL54 4DX
Tel.: +44 (0) 1451 861 652
Fax: +44 (0) 1451 861 660
Email: sales@augertorque.com
www.augertorque.com

Australia:
Auger Torque Australia Pty Ltd.
122 Boundary Road, Rocklea
Queensland 4106
Tel.: +61 (0) 7 3274 2077
Fax: +61 (0) 7 3274 5077
Email: sales@augertorque.com.au
www.augertorque.com.au

Doherty Couplers & Attachments Ltd.
PO Box 701,
Annerley (Brisbane) QLD, 4103
Tel.: +61 1 800 057 021
Email: sales@dohertydirect.net
www.dohertydirect.net

New Zealand:
Doherty Engineered Attachments Ltd.
PO Box 9339, Greerton
Tauranga 3142
Tel.: +64 7 574 3000
Fax: +64 7 574 8030
Email: sales@dohertydirect.net
www.dohertydirect.net

United States of America:
Solesbee's Equipment & Attachments, LLC
2640 Jason Industrial Parkway
Winston, GA 30187
Toll Free (North America): 1-800-419-8090
Email: sales@solesbees.com
www.solesbees.com

中国:
Auger Torque China CO., Ltd.
Baozhan Rd, Tongyi Industry Zone
Dongwu, Yinzhou, Ningbo
China 315114
Tel.: + 86 (0) 574 8848 8181
Fax: + 86 (0) 574 8848 8687
Email: john.hu@attachmenttorque.com
www.augertorque.com

Italia:
Hammer S.r.l.
Via Oleifici dell' Italia Meridionale, lotto G1
IT-70056 Molfetta BA
Tel.: +39 080 337 5317
Email: info@hammereurope.com
www.hammereurope.com

EXA-C-Grabs-E-2020